SPYDER ROADSTER 2010
RT
RT AUDIO & CONVENIENCE
RT-S
ELECTRICAL SYSTEM

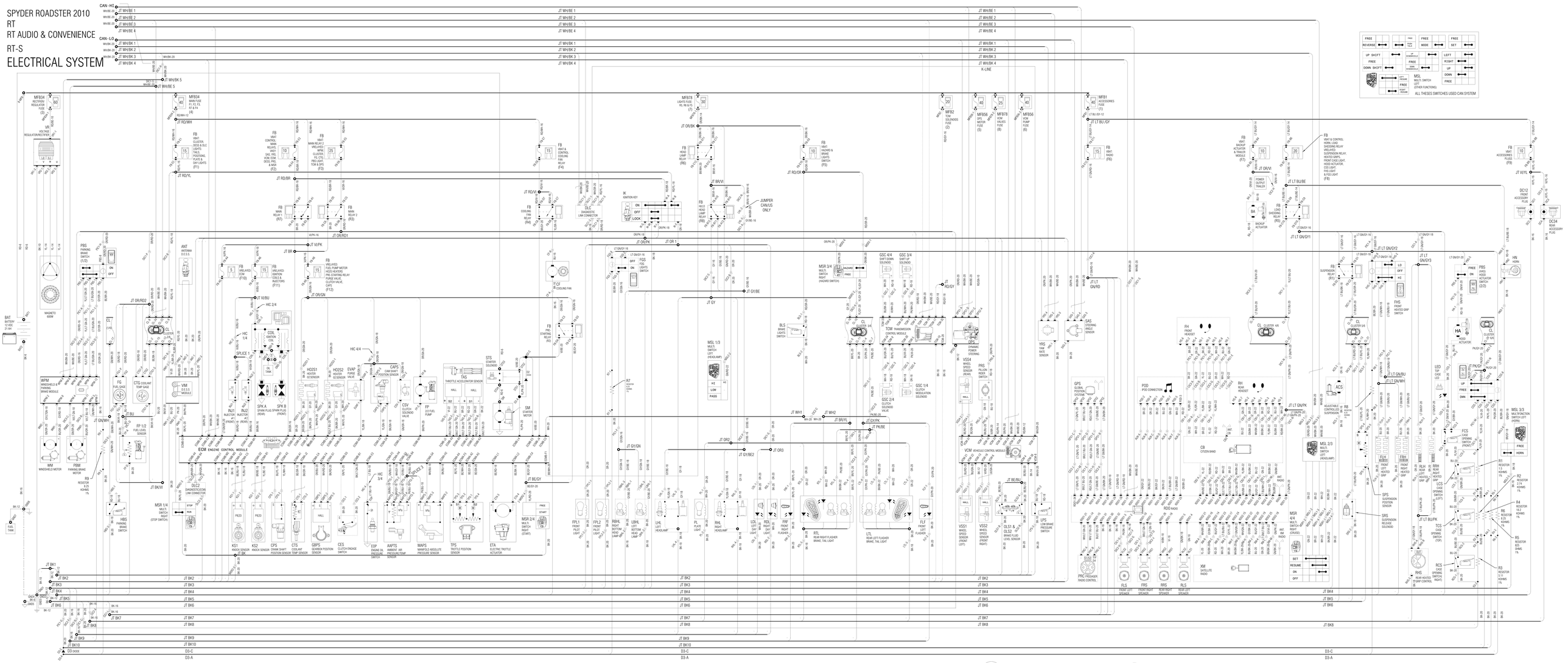

ACRONYMS	ZONE	HARNESS / CABLES
AAPTS	9	
CAPS	5	
COIL	22	
CPS	5	
CSV	6	
CTS	5	
ECMA	1	
ETA	6	MOTOR HARNESS 420266335
EVAP	6	
GBPS	20	
HIC	1	
IN1	6	
IN2	5	
KS1	5	
KS2	5	
MAPS	5	
TPS	5	
AUX	8	
CIC1	7	
CIC2	7	
LCS	7	
LTL	23	
PL	17	
PNC	8	CARGO HARNESS 710001490
RCS	8	
RDO1	8	
RHS	7	
RLH	7	
RRH	8	
RTL	24	
TCS	16	
CL	2	
CTG1	2	
DIC1	5	
DIC2	5	
DIC3	5	
FG1	2	
FLF	10	CONSOLE HARNESS 710001614
FRF	11	
LDL	20	
LHL	20	
RDL	20	
RHL	24	
WM1	20	
WM2	20	
WPM	20	
HN1	9	HORN HARNESS 710001864
HN2	9	
HN3	9	
AAPTS	9	AAPTS HARNESS 710001865
PTS	9	
CSS	12	SWITCHES HARNESS 710001925
FGS	12	

ACRONYMS	ZONE	HARNESS / CABLES
FHS	12	SWITCHES HARNESS 710001925
PBS	12	
PIC1	22	
PIC2	22	HEADSET / IPOD HARNESS 710002004
CB1	8	ENTERTAINMENT HARNESS 710002005
CB2	8	
CIC3	7	
RDO2	8	
XM	7	
BAT	7	SOL/BAT/MFB CABLE 710002079
MFB	13	
STS	13	
COIL	22	OIL TANK CABLE 710002091
GND	22	
TANK	22	
ACS	23	
BA	22	
BLS	21	
CES	20	
CF	19	
CIC1	7	
CIC2	7	
CIC3	7	
DC1	9	
DC2	9	
DIC1	5	
DIC2	5	
DIC3	5	
DLC1	1	
DLC2	1	
DLC3	1	
DPS1	9	
DPS2	9	
ECMB	1	MAIN HARNESS 710002173
EGP	19	
FB	1	
FCS	1	
FLH	20	
FP	5	
FPL1	9	
FPL2	9	
FRH	20	
GPS1	20	
GPS2	20	
GND1	9	
GND2	9	
HA	1	
HBS	21	
HIC	1	
HN3	9	
HOS1	6	
HOS2	5	
IK	2	

ACRONYMS	ZONE	HARNESS / CABLES
LBHL	9	
LED	9	
LPS	21	
MFB1	13	
MFB34	13	
MFB56	13	
MFB78	13	
MSL2	5	
MSL3	5	
MSR2	5	
OLS1	23	
OLS2	23	
PBM1	6	
PBM2	6	
PIC1	22	
PIC2	22	
PRS	7	
RBHL	9	
SAS	9	
SPS	23	
SRS	23	
STS1	13	
STS2	13	
TAS	5	
VCM	9	
VIM1	6	
VIM2	6	
VR1	5	
VSS1	9	
VSS2	9	
VSS4	23	
YRS	5	
ACS	23	MAIN HARNESS 710002174
BLS	21	
CF	19	
CIC1	7	
CIC2	7	
CIC3	7	
DC1	9	
DC2	9	
DIC1	5	
DIC2	5	
DIC3	5	
DLC1	1	
DLC2	1	
DLC3	1	
DPS1	9	
DPS2	9	
ECMB	1	
EGP	19	
FB	1	
FCS	1	
FLH	20	
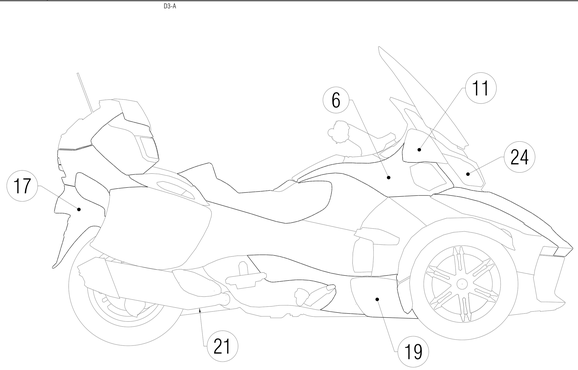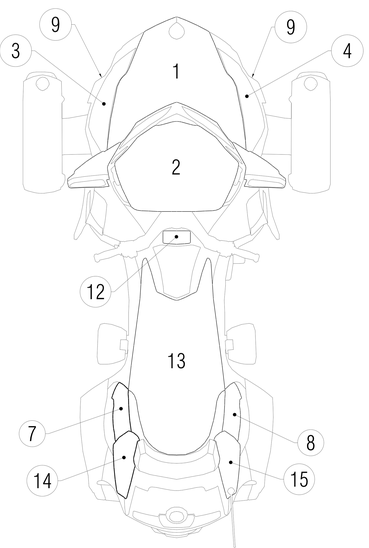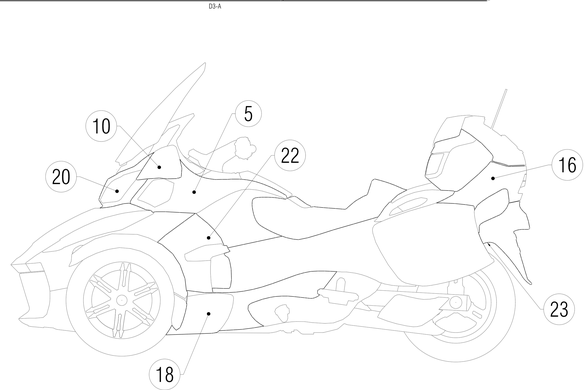
ACRONYMS	ZONE	HARNESS / CABLES
FP	5	
FPL1	9	
FPL2	9	
FRH	20	
GPS1	20	
GPS2	20	
GND1	9	
GND2	9	
GSC	22	
HA	1	
HBS	21	
HIC	1	
HN3	9	
HOS1	6	
HOS2	6	
IK	2	
LBHL	9	
LED	9	
LPS	21	
MFB1	13	
MFB2	13	
MFB34	13	
MFB56	13	
MFB78	13	
MSL2	5	
MSL3	5	
MSR2	5	
OLS1	23	
OLS2	23	
PBM1	6	
PBM2	6	
PIC1	22	
PIC2	22	
PRS	7	
RBHL	9	
SAS	9	
SPS	23	
SRS	23	
STS1	13	
STS2	13	
TAS	5	
TCM	5	
VCM	9	
VIM1	6	
VIM2	6	
VR1	5	
VSS1	9	
VSS2	9	
VSS4	23	
YRS	5