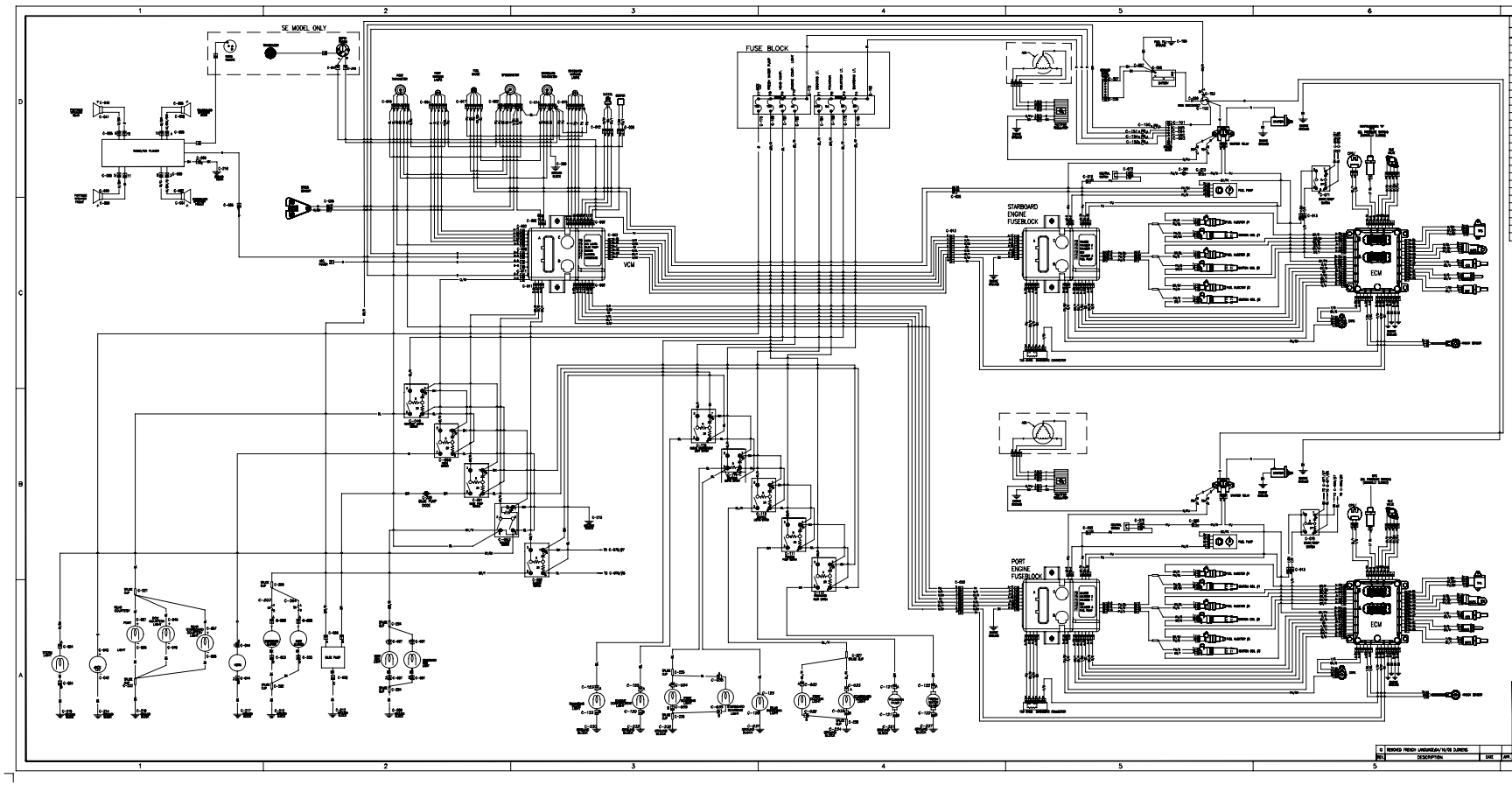

Engine Fuseblock		
CONNECTOR	PIN	FUNCTION
A	1	ECM CAN H
A	2	VCM CAN H
A	3	DIAG CAN H
A	4	ECM CAN L
A	5	VCM CAN L
A	6	DIAG CAN L
A	7	START/STOP POWER
A	8	VCM 12V POWER
A	10	DIAG 12V
A	11	GAUGES 12V
A	12	STARTER RELAY
A	13	ECM STARTER –
A	14	START RELAY +
A	16	DESS SWITCH
A	17	ECM RELAY –
A	19	DIAGNOSTIC GND
A	23	T.O.P.S GND
A	25	VCM GND
A	27	ENGINE GND
A	30	DESS SWITCH
B	A	T.O.P.S VALVE
B	B	ECM 12V POWER
B	C	CYLINDER 1 POWER
B	D	CYLINDER 2 POWER
B	E	12V POWER
B	F	FUEL PUMP
B	G	CYLINDER 3 POWER

Vehicle Control Module		
CONNECTOR	PIN	FUNCTION
A	1	VCM GND 2
A	2	DESS SWITCH
A	3	VCM GND
A	4	VCM 12V POWER
A	5	TACHOMETER
A	7	DESS SIGNAL 2
A	8	CHECK ENGINE 2
A	9	LOW BATTERY 2
A	10	CHECK ENGINE
A	11	LOW OIL
A	13	BUZZER –
A	16	CAN HIGH
A	17	DESS SWITCH
A	18	DESS GND
A	19	VCM 12V POWER 2
A	20	SPEED
A	21	DESS SIGNAL
A	23	TACHOMETER 2
A	24	HIGH TEMP 2
A	25	LOW OIL 2
A	26	HIGH TEMP
A	27	LOW BATTERY
A	28	DESS SIGNAL
A	29	DESS SWITCH 2
A	30	CAN HIGH 2
A	31	CAN LOW 2
A	32	CAN LOW
B	D	RADIO/CD
B	E	12V POWER
B	G	ACCESSORY
C	A	SPARE
C	B	BLOWER
C	C	HORN
C	D	NAV LIGHTS
C	F	12V POWER
C	G	BILGE PUMP

WIRE COLOR CODE TABLE	
CODE	ENGLISH
BK	BLACK
BL	BLUE
BR	BROWN
G	GREEN
GY	GREY
LT BL	LIGHT BLUE
O	ORANGE
PK	PINK
PU	PURPLE
R	RED
T	TAN
W	WHITE
Y	YELLOW

REV	DESCRIPTION	DATE	APP
0	REMOVED FRENCH LANGUAGE/04/10/08 DURIENS		

Mercury Recreational Products Inc.

ISLANDIA TWIN
WIRING SCHEMATIC

204 471 246 | 0